High-Precision AD/DA Board

From Waveshare Wiki
Jump to: navigation, search

Introduction

High-Precision AD/DA Board

(http://www.waveshare.com/High-Precision-AD-DA-Board.htm)

Raspberry Pi AD/DA Expansion

Raspberry Pi AD/DA Expansion Board is designed for Raspberry Pi and Jetson nano.

Features

- Onboard ADS1256, 8-ch 24bit high-precision ADC (4ch differential input), 30ksps sampling rate.
- Onboard DAC8552, 2-ch 16bit high-precision DAC.
- The pinout is compatible with the Waveshare sensor interface standard, easy to connect various analog sensor modules.
- Onboard terminal block encapsulates the input and output interface, which can be connected to analog signals and digital signals, which is convenient for use on various occasions.
- Features AD/DA detect circuit, easy for signal demonstration.
- Provides online sample demo of Raspberry Pi and Jetson Nano.

Pinouts

Pin Function	BCM	WiringPi	Description
DRDY	P17	P0	ADS1256 data output，active-low
RESET	P18	P1	ADS1256 reset input
PDWN	P27	P2	ADS1256 Sync/Shutdown power input, active-low
CS0	P22	P3	ADS1256 chip select, active-low
C1	P23	P4	DAC8532 chip select, active-low
DIN	P10	P12	SPI data input
DOUT	P9	P13	SPI data output

SCK	P11	P14	SPI clock signal

Raspberry Pi

Provides C code and Python demo.

Open SPI Interface

- Open the Raspberry Pi terminal, and enter the configuration interface with the following commands:

```
sudo raspi-config
Choose Interfacing Options -> SPI -> Yes to enable the SPI interface
```

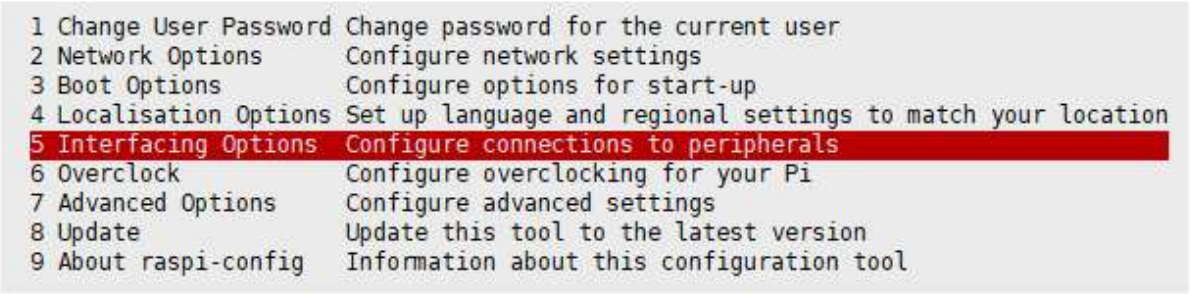

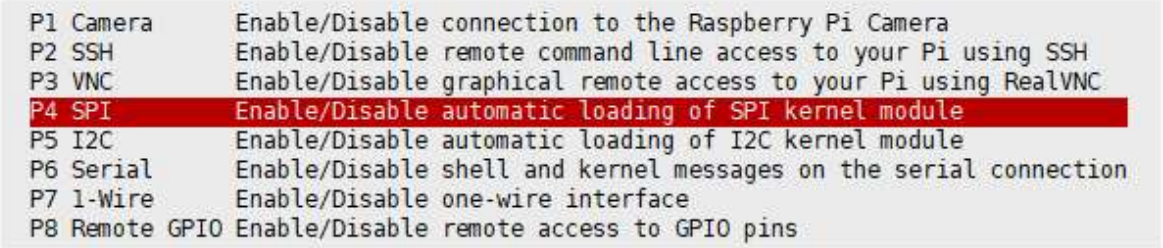

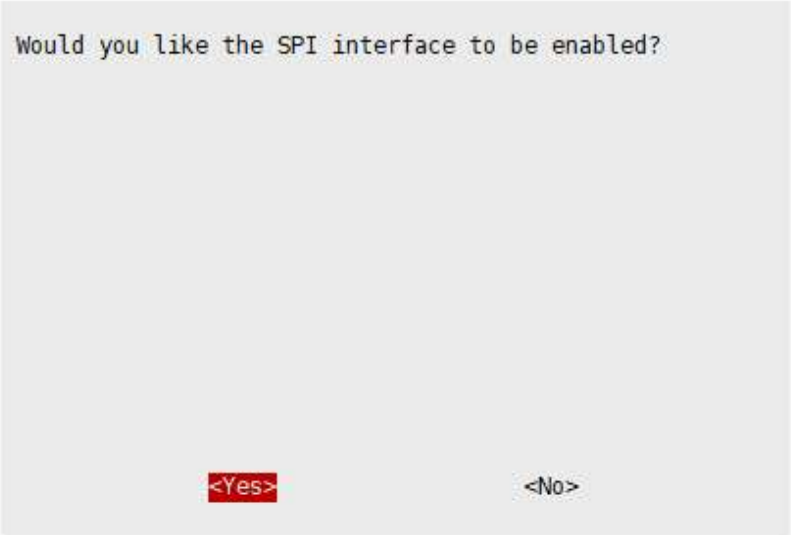

(/wiki/File:RPI_open_spi.png)

Then reboot Raspberry Pi.

```
sudo reboot
```

- Check /boot/config.txt, and you can see 'dtparam=spi=on' was written in.

```
# Uncomment some or all of these to enable the optional hardware interfaces
dtparam=i2c_arm=on
#dtparam=i2s=on
dtparam=spi=on
```

(/wiki/File:Raspberry_Pi_Guides_for_4.37_e-Paper.jpg)

To make sure SPI is not occupied, it is recommended to close other drivers' coverage. You can use ls /dev/spi to check whether SPI is occupied. If the terminal outputs /dev/spidev0.1 and /dev/spidev0.1, SPI is not occupied.

```
pi@raspberrypi:~ $ ls /dev/spi*
/dev/spidev0.0  /dev/spidev0.1
```

(/wiki/File:Raspberry_Pi_Guides_for_4.37_e-Paper02.jpg)

If you use bookworm system, only the lgpio library is available, bcm2835 and wiringPi libarary cannot be installed or used. Please note that the python library does not need to be installed, you can directly run the demo.

BCM2835

```
#Open the Raspberry Pi terminal and run the following commands:
wget http://www.airspayce.com/mikem/bcm2835/bcm2835-1.71.tar.gz
tar zxvf bcm2835-1.71.tar.gz
cd bcm2835-1.71/
sudo ./configure && sudo make && sudo make check && sudo make install
# For more information, please refer to the official website: http://www.airspayce.com/mi
kem/bcm2835/
```

wiringPi

```
#Open the Raspberry Pi terminal and run the following commands:
cd
sudo apt-get install wiringpi
#For Raspberry Pi systems after May 2019 (those earlier may not require execution), an up
grade may be necessary:
wget https://project-downloads.drogon.net/wiringpi-latest.deb
sudo dpkg -i wiringpi-latest.deb
gpio -v
# Run gpio -v and version 2.52 will appear. If it does not appear, there is an installati
```

```
on error

#Bullseye branch system uses the following command:
git clone https://github.com/WiringPi/WiringPi
cd WiringPi
./build
gpio -v
# Run gpio -v and version 2.70 will appear. If it does not appear, there is an installati
on error
```

lgpio

```
sudo su
wget https://github.com/joan2937/lg/archive/master.zip
unzip master.zip
cd lg-master
sudo make install
# For more information, please refer to the official website: https://github.com/gpiozer
o/lg
```

- python

```
sudo apt-get update
sudo apt-get install ttf-wqy-zenhei
sudo apt-get install python-pip
sudo pip install RPi.GPIO
sudo pip install spidev
```

Download Demo

Run in raspberry pi terminal:

```
sudo apt-get install p7zip-full
wget https://files.waveshare.com/upload/5/5e/High-Precision-AD-DA-Board-Code.7z
7z x High-Precision-AD-DA-Board-Code.7z -r -o./High-Precision-AD-DA-Board-Code
cd High-Precision-AD-DA-Board-Code/RaspberryPI/
```

AD Demo

```
cd ADS1256
```

Provides four demos: bcm2835, python2, python3, wiringpi.

- Hardware Settings

Set the Power Supply to 5V: connect 5V to VCC.
Set the Reference Input Voltage to 5V: connect 5V to VREF.
Set the Potentiometer output as an Analog Input: connect the pin ADJ and AD0. Make sure the left side Sensor Interface AD0 is disconnected.
Set the LDR output as an Analog Input: connect the pin LDR and AD1. Make sure the left-side Sensor Interface AD1 is disconnected. Connect AINCOM to AGND. When using AD for differential measurements, the common input AINCOM does not need to be tied to the ground.

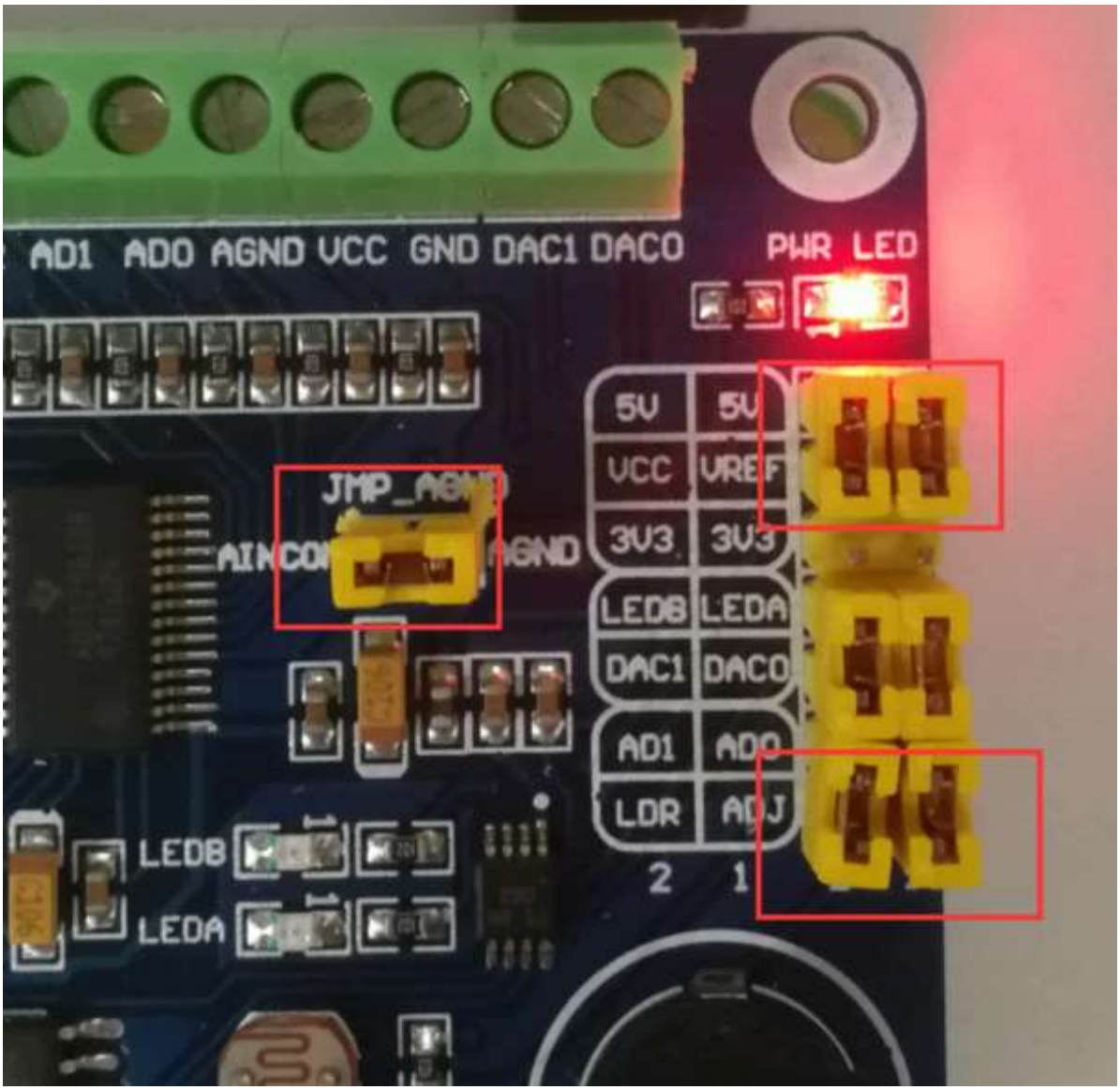

(/wiki/File:High-Precision-AD-DA_ADset.png)

1. bcm2835

```
cd bcm2835/
make
sudo ./ads1256_test
```

Notice: If you have run BCM2835 libraries, you need to reboot Raspberry Pi so as to run other libraries successfully.

2. wiringpi

```
cd wiringpi/
make
sudo ./ads1256_test
```

3. python2

```
cd python2/
sudo python  main.py
```

4. python3

```
cd python3/
sudo python3  main.py
```

- Experiment Phenomenon:

Turn the potentiometer, the AD0 channel voltage will change accordingly.
Block the photoresistor, and the AD1 channel voltage changes accordingly.
Since other channels are not connected to the load, the related pins float around 1.17V.

DA Demo

```
cd DAC8532/
```

Provides four demos: bcm2835, python2, python3, wiringpi.

- Hardware setting

Set the Power Supply to 5V: connect 5V to VCC.
Set the Reference Input Voltage to 5V: connect 5V to VREF.
Connect DA0 to LEDA and DA1 to LEDB. Then the brightness of the indicator LEDA will

change according to the DA0 output voltage. The brightness of the indicator LEDB will vary according to the DA1 output voltage.

1. bcm2835

```
cd bcm2835/
make
sudo ./dac8532_test
```

Notice: If you have run BCM2835 libraries, you need to reboot Raspberry Pi so as to run other libraries successfully.

2. wiringpi

```
cd wiringpi/
make
sudo ./dac8532_test
```

3. python2

```
cd python2/
sudo python  main.py
```

4. python3

```
cd python3/
sudo python3  main.py
```

- Experiment Phenomenon:

Breathing light effect in LEDA and LEDB.

AD/DA synthetical demo

```
cd AD-DA/
```

Provide demo: bcm2835, python.

1. bcm2835

```
cd bcm2835/
make
sudo ./main
```

Notice: If you have run BCM2835 libraries, you need to reboot Raspberry Pi so as to run other libraries successfully.

2. python

```
cd python/
sudo python  main.py
```

- Experiment Phenomenon

After rotating the potentiometer, the two LEDs will light up alternately.

Jetson nano Developer Kit

Jetson nano program uses analog SPI, so SPI rate or sample rate is relatively slower.

Software setting

Install Function Libraries:

- Open the terminal interface and enter the following commands to install function libraries.

```
cd python/
sudo apt-get update
sudo apt-get install python3-pip
sudo pip3 install Jetson.GPIO
sudo groupadd -f -r gpio
sudo usermod -a -G gpio your_user_name
sudo cp /opt/nvidia/jetson-gpio/etc/99-gpio.rules /etc/udev/rules.d/
sudo udevadm control --reload-rules && sudo udevadm trigger
```

- Install I2C:

```
sudo apt-get install python-smbus
```

- Install image processing libraries

```
sudo apt-get install python3-pil
sudo apt-get install python3-numpy
```

Download Testing Demo

Open linuxterminal and execute:

```
sudo apt-get install p7zip-full
wget https://files.waveshare.com/upload/5/5e/High-Precision-AD-DA-Board-Code.7z
7z x High-Precision-AD-DA-Board-Code.7z -r -o./High-Precision-AD-DA-Board-Code
cd High-Precision-AD-DA-Board-Code/Jetsonnano/
```

AD Demo

```
cd ADS1256
```

Provides three demos: c, python2, python3.

- Hardware Setting

Set the Power Supply to 5V: connect 5V to VCC.
Set the Reference Input Voltage to 5V: connect 5V to VREF.
Set the Potentiometer output as an Analog Input: connect the pin ADJ and AD0. Make sure the left side Sensor Interface AD0 is disconnected.
Set the LDR output as an Analog Input: connect the pin LDR and AD1. Make sure the left-side Sensor Interface AD1 is disconnected. Connect AINCOM to AGND. When using AD for differential measurements, the common input AINCOM does not need to be tied to the ground.

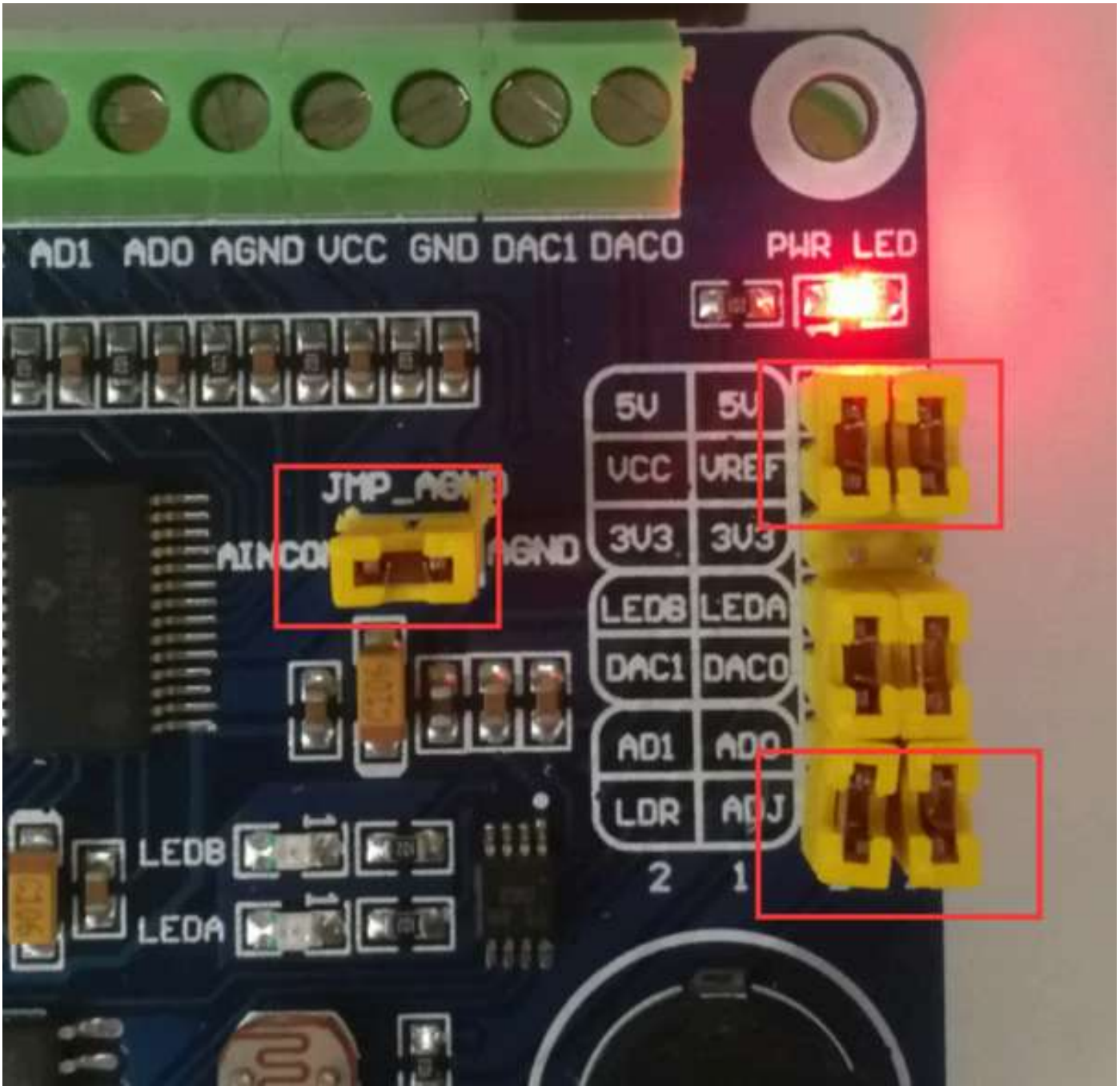

(/wiki/File:High-Precision-AD-DA_ADset.png)

1. C

```
cd C/
make
sudo ./main
```

2. python2

```
cd python2/
sudo python  main.py
```

3. python3

```
cd python3/
sudo python3  main.py
```

- Experiment Phenomenon:

Turn the potentiometer, the AD0 channel voltage will change accordingly.
Block the photoresistor, and the AD1 channel voltage changes accordingly.
Since other channels are not connected to the load, it is not connected, so it floats around 1.17V.

DA Demo

```
cd DAC8532/
```

Provides three demos: c, python2, python3.

- Hardware Setting:

The operating voltage is set to 5V: connect 5V to VCC.
The reference voltage is set to 5V: connect 5V to VREF.
Connect DA0 to LEDA and DA1 to LEDB. Then the brightness of the indicator LEDA will change according to the DA0 output voltage. The brightness of the indicator LEDB will vary according to the DA1 output voltage.

1. C

```
cd C/
make
sudo ./main
```

2. python2

```
cd python2/
sudo python  main.py
```

3. python3

```
cd python3/
sudo python3  main.py
```

- Experiment Phenomenon:

Breathing light effect in LEDA and LEDB.

AD/DA demo

```
cd AD-DA/
```

Provides three demos：c, python2, python3.

1. C

```
cd C/
make
sudo ./main
```

2. python2

```
cd python2/
sudo python  main.py
```

3. python3

```
cd python3/
sudo python3  main.py
```

- Experiment Phenomenon:

After rotating the potentiometer, the two LEDs will light up alternately.

Resource

Documentation

- User Manual (https://files.waveshare.com/upload/b/b7/High-Precision-AD-DA-User-Manual.pdf)
- Schematic (https://files.waveshare.com/upload/2/29/High-Precision-AD-DA-board.pdf)

- Source code (https://files.waveshare.com/upload/5/5e/High-Precision-AD-DA-Board-Code.7z)
- Github (https://github.com/waveshare/High-Precision-AD-DA-Board)
- Third Party Project shared by user Henri P Gavin (https://service.waveshare.com/wswt/ticket/edit/160609?ll=/wswt)

Datasheets

- ADS1256 (/wiki/File:ADS1256.pdf)
- DAC8532 (/wiki/File:DAC8532-datasheet.pdf)
- LM285 (/wiki/File:LM285_datasheet.pdf)

Application Notes

- CP2102 (/wiki/File:CP2102.pdf)
- PCF8563 (/wiki/File:PCF8563.pdf)
- Writing the Img to the SD card (https://files.waveshare.com/upload/4/49/Writing-the-Img-to-the-SD-card.pdf)
- Libraries Installation for RPi (/wiki/Libraries_Installation_for_RPi)
- Panasonic_SDFormatter (https://files.waveshare.com/upload/d/d7/Panasonic_SDFormatter.zip)
- Win32DiskImager (https://files.waveshare.com/upload/7/76/Win32DiskImager.zip)
- putty (https://files.waveshare.com/upload/5/56/Putty.zip)
- wiringPi & bcm2835 C LIB (/wiki/File:RPi_software.zip)

FAQ

Question:According to the introduction, the module has a sampling rate of 30ksps, why the AD test cannot reach this rate?

Answer:

The sample demo enables 8-channel high-precision ADC by default. To ensure stability and accuracy, the program adds a delay when reading and processing data. If a higher rate is required, the delay can be commented out.
High-Precision-AD-DA-Board-1CH (https://files.waveshare.com/upload/7/7c/AD1256-bcm2835.zip)

Question:Why does the running program show ID read fail?

Answer:
After running the BCM2835 library, you need to restart the Raspberry Pi to run the rest of the libraries normally. Restart the Raspberry Pi and run it again.

Question:After running the program, why does it always display 5V

Answer:

- The unconnected idle channel shows 5.08V; it is a normal phenomenon due to the internal structure of the chip.
- The default floating voltage is 5.08V, which does not affect the use. If you do not need other channels, you can close this channel or connect it to GND

Question:How can I simply test that the AD is functioning properly?

Answer:

You can connect the 3.3V pin of the Raspberry Pi to the ADX (AD7 here), and after running the ADC program, it can display a voltage close to 3.3V, which indicates that the function is normal, and the wiring is as shown in the figure:

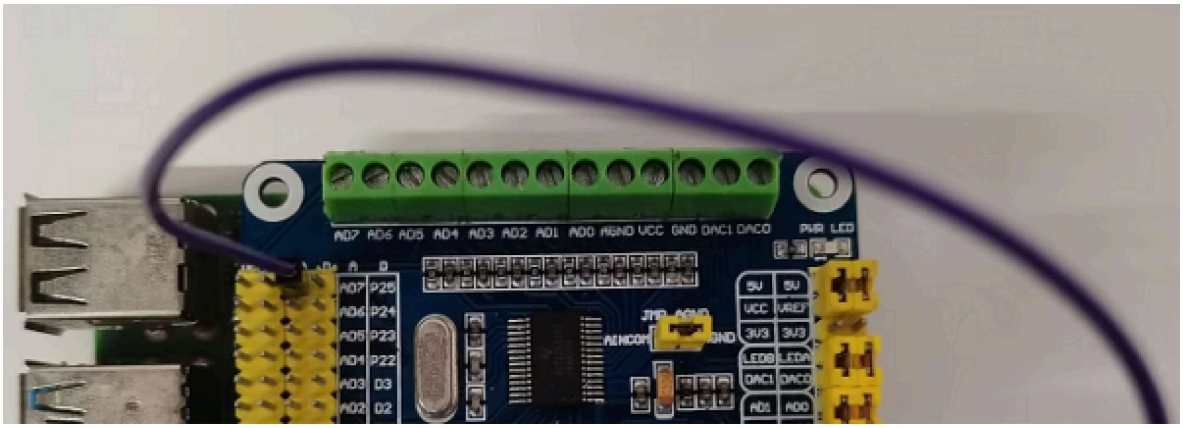

(/wiki/File:High-Precision_AD-DA_Board_FAQ.png)

Question:Is High-Precision AD/DA Board compatible with STM32?

Answer:

- Compatible with STM32.
- For more models about STM32, you can refer to the following STM32F10X demo to compile and port: sample demo (https://files.waveshare.com/upload/f/f5/High-Precision-AD-DA-Board-Code-STM32F10X.zip).

Question:Does it support Raspberry Pi 4B?

Answer:

Yes, it supports Raspberry Pi 4B.

Question:How does the Jetson nano load spi0?

Answer:

```
sudo modprobe spidev
```

Question:What the utility of the "DEV_Delay_ms(1)" in the line 235 (fonction ADS1256_Read_ADC_Data)?

Answer:

You can refer to this description of the datasheet.

RDATA: Read Data

Description: Issue this command after $\overline{DRDY}$ goes low to read a single conversion result. After all 24 bits have been shifted out on DOUT, $\overline{DRDY}$ goes high. It is not necessary to read back all 24 bits, but $\overline{DRDY}$ will then not return high until new data is being updated. See the Timing Characteristics for the required delay between the end of the RDATA command and the beginning of shifting data on DOUT: t_6.

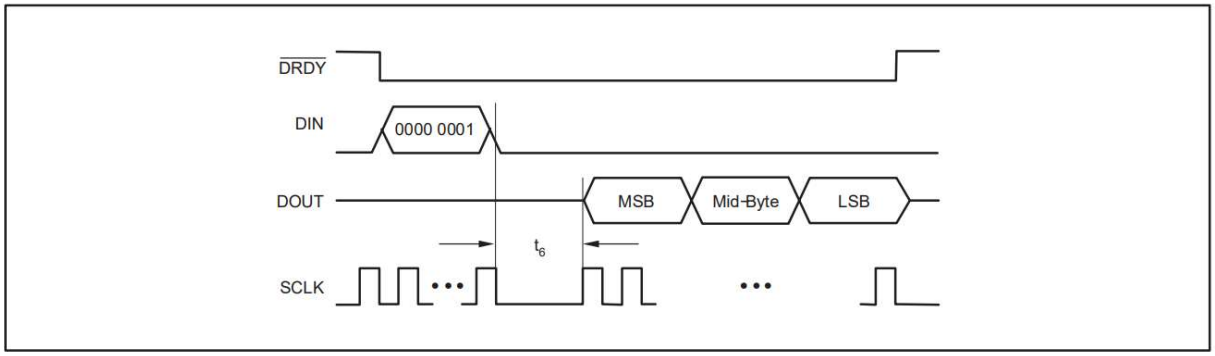

Figure 29. RDATA Command Sequence

(/wiki/File:HD_rdata_faq.png)

Support

Technical Support

If you need technical support or have any feedback/review, please click the **Submit Now** button to submit a ticket, Our support team will check and reply to you within 1 to 2 working days. Please be

Submit Now (https://service.waveshare.com/)

patient as we make every effort to help
you to resolve the issue.
Working Time: 9 AM - 6 PM GMT+8
(Monday to Friday)

Retrieved from "https://www.waveshare.com/w/index.php?title=High-Precision_AD/DA_Board&oldid=87049 (https://www.waveshare.com/w/index.php?title=High-Precision_AD/DA_Board&oldid=87049)"